ISA 130x130x10

Indian Standard Equal Leg Angle -- IS 808 : 1989

CROSS SECTION

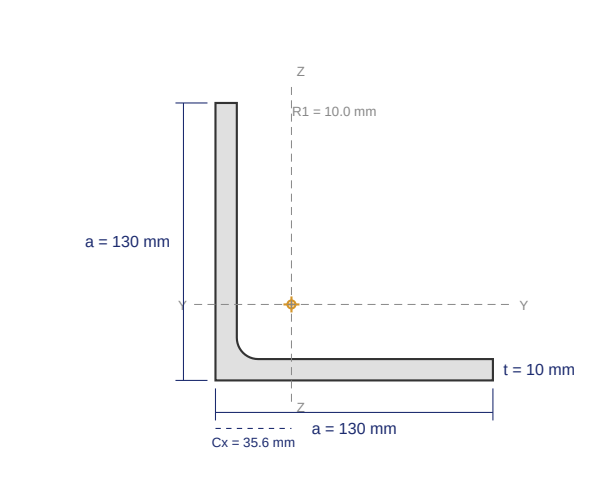

DIMENSIONS

Leg A	**130 mm**
Leg B	**130 mm**
Thickness (t)	**10 mm**
Root Radius (R1)	**10.0 mm**
Toe Radius (R2)	**5.0 mm**
Centroid Cx	**35.6 mm**
Centroid Cy	**35.6 mm**
Weight per Meter	**19.7 kg/m**
Cross-sectional Area	**2510 mm2**

SECTIONAL PROPERTIES

Property	About X-X Axis	About Y-Y Axis
Moment of Inertia	**Ix = 2900000 mm4**	**Iy = 2900000 mm4**
Elastic Section Modulus	**Zx = 31900 mm3**	**Zy = 31900 mm3**
Radius of Gyration	**rx = 34.0 mm**	**ry = 34.0 mm**
Centroid from Heel	**Cx = 35.6 mm**	**Cy = 35.6 mm**

AVAILABLE GRADES (IS 2062 : 2011)

Grade	Yield (MPa)	UTS (MPa)	Elongation	Application
E250 (Fe 410W)	250	410	23%	General construction
E275 (Fe 440)	275	440	22%	Commercial buildings
E350 (Fe 490)	350	490	22%	Heavy industrial, bridges
E410 (Fe 540)	410	540	20%	Heavy structural, offshore

APPLICABLE STANDARDS

IS 808 : 1989	Dimensions for hot rolled steel beam, column, channel and angle sections
IS 2062 : 2011	Hot rolled medium and high tensile structural steel
IS 1852	Tolerances for hot rolled structural steel sections

For reference only. Verify against the latest published IS 808 standard before use in structural design.